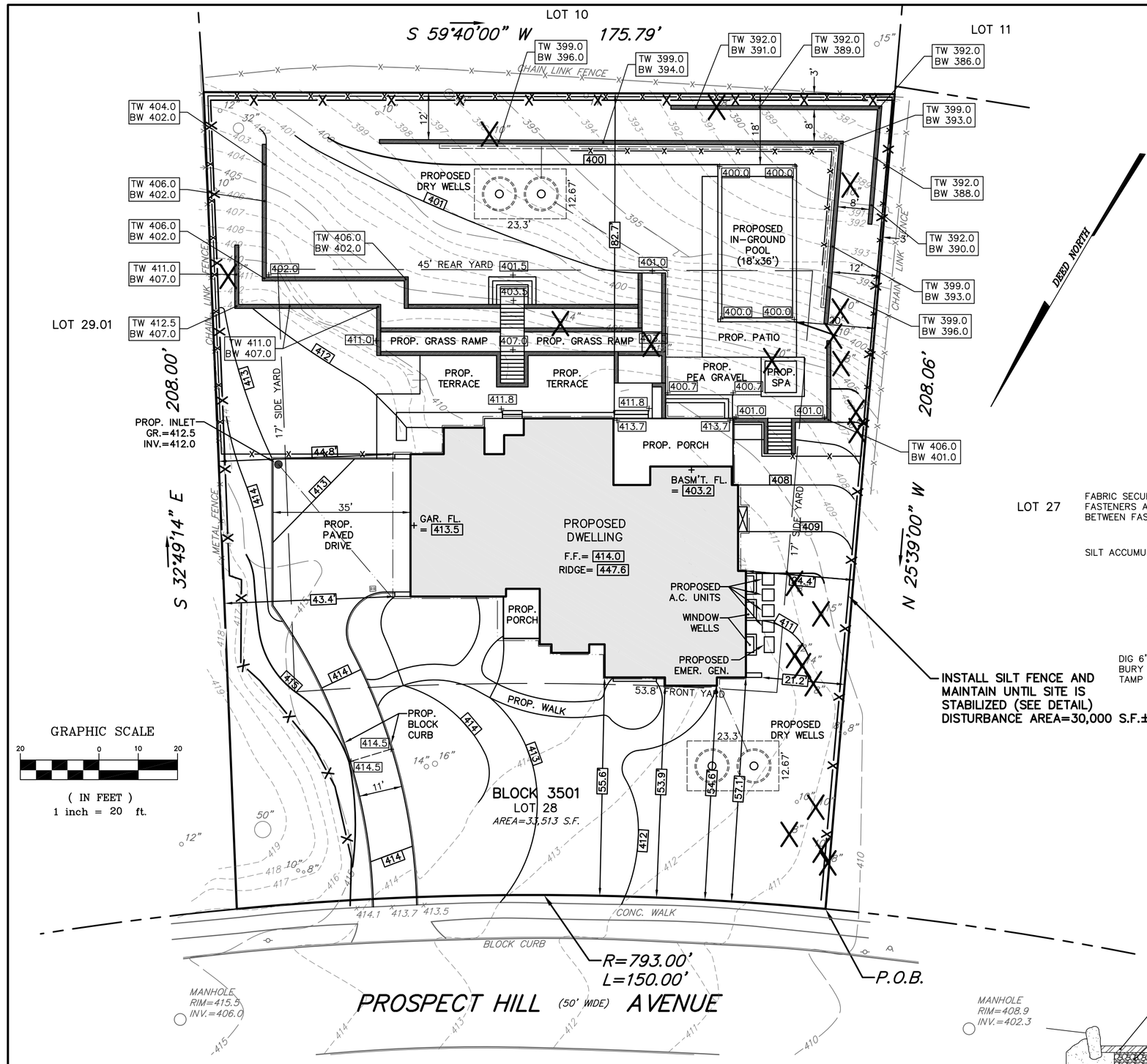

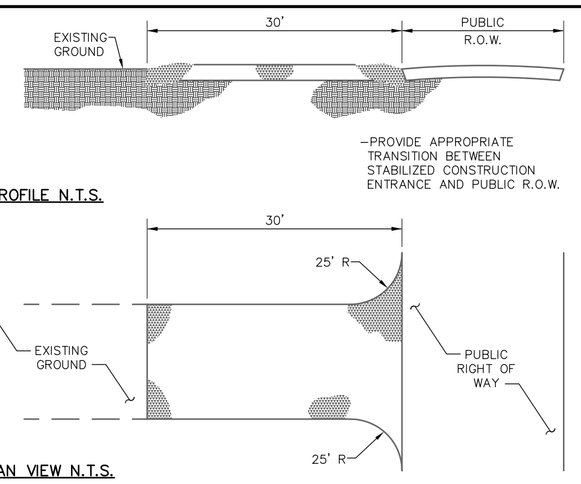

ANTI–TRACKING PAD

SCALE N.T.S.

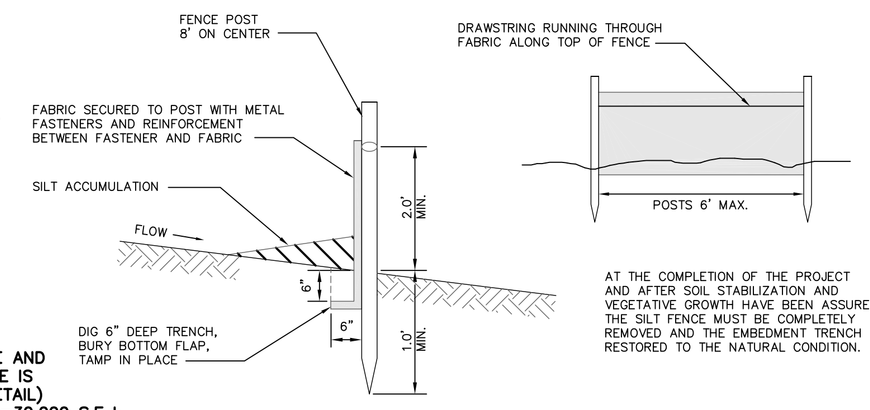

AT THE COMPLETION OF THE PROJECT AND AFTER SOIL STABILIZATION AND VEGETATIVE GROWTH HAVE BEEN ASSURED, THE SILT FENCE MUST BE COMPLETELY REMOVED AND THE EMBEDMENT TRENCH RESTORED TO THE NATURAL CONDITION.

SILT FENCE DETAIL

SCALE N.T.S.

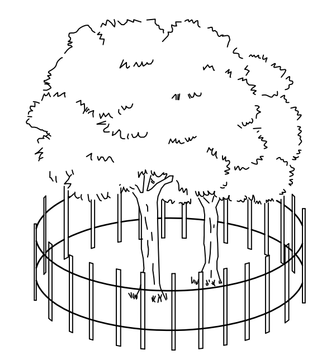

BOX ALL TREES WITHIN 25 FEET OF THE SITE TO PREVENT MECHANICAL INJURY. FENCING OR OTHER BETTER BARRIER SHOULD BE INSTALLED AT THE DRIP LINE OF THE TREE BRANCHES WHERE POSSIBLE.

TREE PROTECTION DETAIL

SCALE N.T.S.

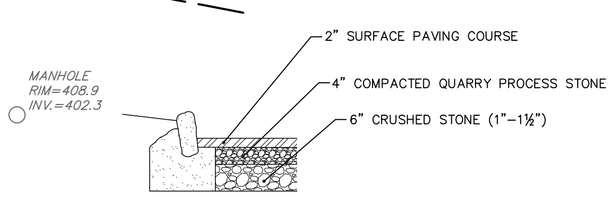

TYPICAL DRIVEWAY SECTION

SCALE N.T.S.

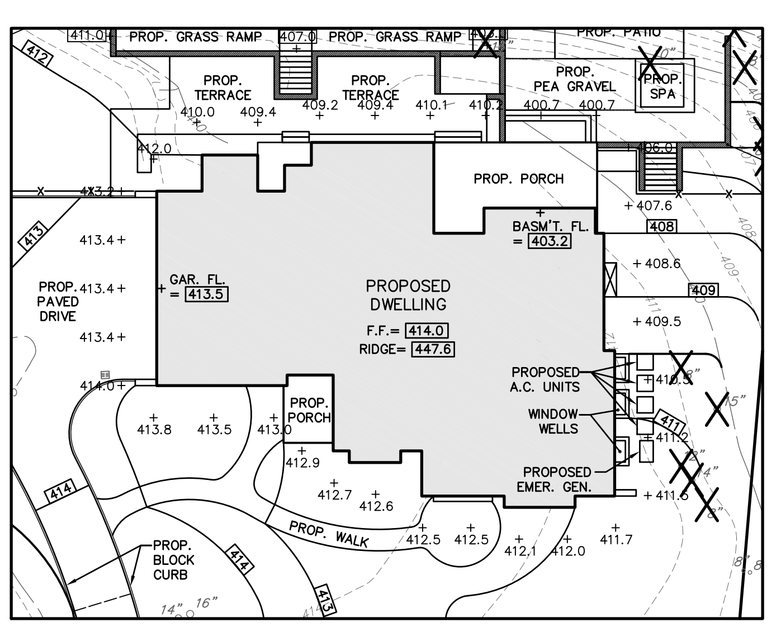

PROPOSED HEIGHT ANALYSIS

AVERAGE GRADE PLANE:
AVERAGE GRADE FOR 32 DATA POINTS SHOWN = 410.7

PROP. BUILDING HEIGHT:
PROP. ROOF PEAK – AVG. GRADE PLANE = 447.6 – 410.7 = 36.9 FT.

"STORY ABOVE GRADE" ANALYSIS

A.) IS FIRST FLOOR MORE THAN SIX FEET ABOVE THE GRADE PLANE?
414.0 (FF) – 410.7 (GRADE PLANE)= 3.3 FEET ==> NO

B.) IS FIRST FLOOR MORE THAN SIX FEET ABOVE THE FINISHED GROUND LEVEL FOR MORE THAN 50% OF THE BUILDING PERIMETER?
35.4' (FDN. > 6' BELOW FF)/328.4' (TOT. FDN. PERIMETER) = 10.8% ==> NO

C.) IS FIRST FLOOR MORE THAN TWELVE ABOVE THE FINISHED GROUND LEVEL AT ANY POINT?
414.0 (FF) – 402.6 (LOW POINT) = 11.4 FEET ==> NO

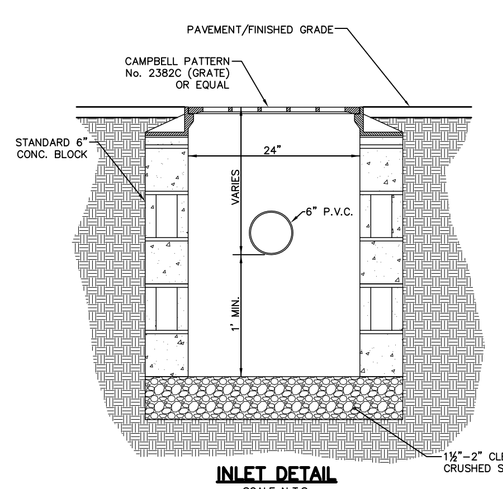

INLET DETAIL

SCALE N.T.S.

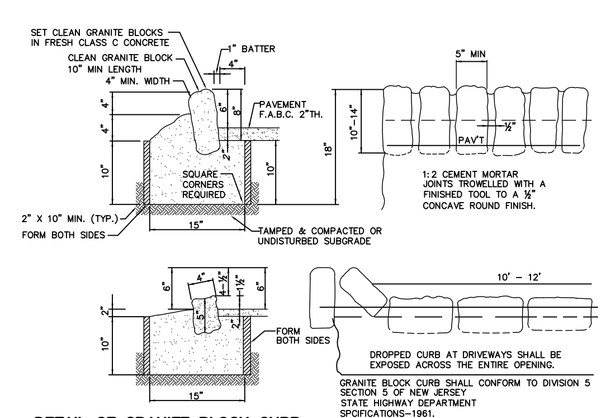

DETAIL OF GRANITE BLOCK CURB

N.T.S.

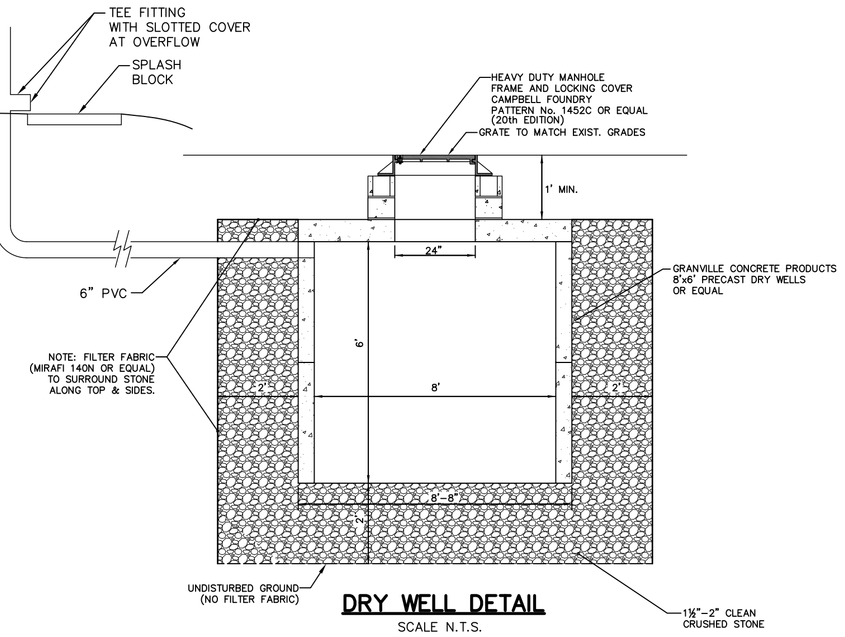

DRY WELL DETAIL

SCALE N.T.S.

DRY WELL DESIGN

CAPTURED IMPERVIOUS AREA = 5,000 FT.^{2} ±

REQUIRED STORAGE:
(5,000 FT.^{2})x(3/12) = 1,250 FT.^{3}

STORAGE PROVIDED:
USING TWO 8' DIA.x 6' HIGH TANKS + STONE w/ 40% VOID RATIO
TANK – (3.14)(4^2)(6)(2) = 602 FT.^{3}
STONE – (0.4) [(12.67x23.3x8)–602 = 703 FT.^{3}

TOTAL STORAGE PROVIDED = 1,305 FT.^{3} > 1,250 FT.^{3} –OK

SOIL EROSION AND SEDIMENT CONTROL NOTES

1. ALL SOIL EROSION AND SEDIMENT CONTROL PRACTICES SHALL BE INSTALLED PRIOR TO ANY MAJOR SOIL DISTURBANCES, OR IN THEIR PROPER SEQUENCE AND MAINTAINED UNTIL PERMANENT PROTECTION IS ESTABLISHED.
2. ANY DISTURBED AREAS THAT WILL BE LEFT EXPOSED FOR MORE THAN 30 DAYS AND NOT SUBJECT TO CONSTRUCTION TRAFFIC, WILL IMMIEDIATELY RECEIVE A TEMPORARY SEEDING. IF THE SEASON PREVENTS THE ESTABLISHMENT OF A TEMPORARY COVER, THE DISTURBED AREAS WILL BE MULCHED WITH STRAW, OR EQUIVALENT MATERIAL, AT A RATE OF TWO (2) TONS PER ACRE, ACCORDING TO NJ STATE STANDARDS.
3. PERMANENT VEGETATION SHALL BE SEEDED OR SODDED ON ALL EXPOSED AREAS WITHIN TEN (10) DAYS AFTER FINAL GRADING. MULCH WILL BE USED FOR PROTECTION UNTIL SEEDING IS ESTABLISHED.
4. ALL WORK SHALL BE DONE IN ACCORDANCE WITH THE NJ STATE STANDARDS FOR SOIL EROSION AND SEDIMENT CONTROL IN NEW JERSEY, 7th EDITION LAST REVISED JANUARY 2014.
5. A SUB–BASE COURSE WILL BE APPLIED IMMEDIATELY FOLLOWING ROUGH GRADING AND INSTALLATION OF IMPROVEMENTS IN ORDER TO STABILIZE STREETS, ROADS, DRIVEWAYS AND PARKING AREAS. IN AREAS WHERE NO UTILITIES ARE PRESENT, THE SUB–BASE SHALL BE INSTALLED WITHIN 15 DAYS OF PRELIMINARY GRADING.
6. IMMEDIATELY FOLLOWING INITIAL DISTURBANCE OR ROUGH GRADING ALL CRITICAL AREAS SUBJECT TO EROSION (I.E.: STEEP SLOPES, ROADWAY EMBANKMENTS) WILL RECEIVE A TEMPORARY SEEDING IN COMBINATION WITH STRAW MULCH OR A SUITABLE EQUIVALENT, AT A RATE OF TWO (2) TONS PER ACRE, ACCORDING TO THE NJ STATE STANDARDS.
7. ANY STEEP SLOPES (I.E.: SLOPES GREATER THAN 3:1) RECEIVING PIPELINE INSTALLATION WILL BE BACKFILLED AND STABILIZED DAILY, AS THE INSTALLATION PROCEEDS.
8. TRAFFIC CONTROL STANDARDS REQUIRE THE INSTALLATION OF A 50'x30'x6"" PAD OF 1½" OR 2" STONE, AT ALL CONSTRUCTION DRIVEWAYS, IMMEDIATELY AFTER INITIAL SITE DISTURBANCE.
9. THE SOMERSET–UNION SOIL CONSERVATION DISTRICT SHALL BE NOTIFIED IN WRITING 48 HOURS IN ADVANCE OF ANY LAND DISTURBING ACTIVITY.
10. AT THE TIME WHEN THE SITE PREPARATION FOR PERMANENT VEGETATIVE STABILIZATION IS GOING TO BE ACCOMPLISHED, ANY SOIL THAT WILL NOT PROVIDE A SUITABLE ENVIRONMENT TO SUPPORT ADEQUATE VEGETATIVE GROUND COVER SHALL BE REMOVED OR TREATED IN SUCH A WAY THAT WILL PERMANENTLY ADJUST THE SOIL CONDITIONS AND RENDER IT SUITABLE FOR VEGETATIVE GROUND COVER. IF THE REMOVAL OR TREATMENT OF THE SOIL WILL NOT PROVIDE SUITABLE CONDITIONS, NON–VEGETATIVE MEANS OF PERMANENT GROUND STABILIZATION WILL HAVE TO BE EMPLOYED. TOPSOIL SHOULD BE HANDLED ONLY WHEN IT IS DRY ENOUGH TO WORK WITHOUT DAMAGING THE SOIL STRUCTURE. A UNIFORM APPLICATION TO A DEPTH OF 5 INCHES (UNSETTLED) IS REQUIRED ON ALL SITES.
11. IN THAT NJSA 4:24.39 ET SEQ., REQUIRES THAT NO CERTIFICATE OF OCCUPANCY BE ISSUED BEFORE THE PROVISIONS OF THE CERTIFIED PLAN FOR SOIL EROSION AND SEDIMENT CONTROL HAVE BEEN COMPLIED WITH FOR PERMANENT MEASURES, ALL SITE WORK FOR SITE PLANS AND ALL WORK AROUND INDIVIDUAL LOTS IN SUBDIVISIONS, WILL HAVE TO BE COMPLETED PRIOR TO THE DISTRICT ISSUING A REPORT OF COMPLIANCE FOR THE ISSUANCE OF A CERTIFICATE OF OCCUPANCY BY THE MUNICIPALITY.
12. CONDUIT OUTLET PROTECTION MUST BE INSTALLED AT ALL REQUIRED OUTFALLS PRIOR TO THE DRAINAGE SYSTEM BECOMING OPERATIONAL.
13. ANY CHANGES TO THE CERTIFIED SOIL EROSION AND SEDIMENT CONTROL PLAN WILL REQUIRE THE SUBMISSION OF REVISED SOIL EROSION AND SEDIMENT CONTROL PLANS TO THE DISTRICT FOR RE–CERTIFICATION. THE REVISED PLANS MUST MEET ALL CURRENT NJ STATE SOIL EROSION & SEDIMENT CONTROL STANDARDS.
14. THE SOMERSET–UNION SOIL CONSERVATION DISTRICT SHALL BE NOTIFIED OF ANY CHANGES IN OWNERSHIP.
15. MULCHING TO THE NJ STANDARDS IS REQUIRED FOR OBTAINING A CONDITIONAL REPORT OF COMPLIANCE. CONDITIONALS ARE ONLY ISSUED WHEN THE SEASON PROHIBITS SEEDING.
16. CONTRACTOR IS RESPONSIBLE FOR KEEPING ALL ADJACENT ROADS CLEAN DURING THE LIFE OF THE CONSTRUCTION PROJECT.
17. THE DEVELOPER SHALL BE RESPONSIBLE FOR REMEDIATING ANY EROSION OR SEDIMENT PROBLEMS THAT ARISE AS A RESULT OF ONGOING CONSTRUCTION AT THE REQUEST OF THE SOMERSET–UNION SOIL CONSERVATION DISTRICT.
18. HYDRO SEEDING IS A TWO–STEP PROCESS. THE FIRST STEP INCLUDES SEED, FERTILIZER, LIME, ETC., ALONG WITH MINIMAL AMOUNTS OF MULCH TO PROMOTE CONSISTENCY, GOOD SEED TO SOIL CONTACT, AND GIVE A VISUAL INDICATION OF COVERAGE. UPON COMPLETION OF SEEDING OPERATION, HDYR–MULCH SHOULD BE APPLIED AT A RATE OF 1500 LBS. PER ACRE IN SECOND STEP. THE USE OF HYDRO–MULCH, AS OPPOSED TO STRAW, IS LIMITED TO OPTIMUM SEEDING DATES AS LISTED IN THE NJ STANDARD.

SOIL COMPACTION REMEDIATION NOTE

PER THE SOIL EROSION AND SEDIMENT CONTROL STANDARDS, AS LISTED IN 19–2, "URBAN REDEVELOPMENT AREAS" ARE EXEMPT FROM COMPACTION REMEDIATION REQUIREMENTS. THE SITE IS LOCATED IN THE METROPOLITAN PLANNING AREA, PA–1, AND IS CONSIDERED AS "PREVIOUSLY DEVELOPED" IN A FULLY DEVELOPED AREA. ACCORDINGLY, THE SITE IS CONSIDERED EXEMPT FROM THE COMPACTION REMEDIATION REQUIREMENTS.

TEMPORARY AND PERMANENT STABILIZATION NOTES

1.) TEMPORARY STABILIZATION – ANY DISTURBED AREA THAT WILL BE LEFT EXPOSED FOR MORE THAN THIRTY (30) DAYS AND NOT SUBJECT TO CONSTRUCTION ACTIVITIES SHALL IMMEDIATELY BE STABILIZED UPON DISTURBANCE BY APPLYING THE FOLLOWING:
   a) GROUND LIMESTONE AT A RATE OF 90 POUNDS PER 1,000 SQUARE FEET.
   b) FERTILIZER AT A RATE OF 14 POUNDS PER 1,000 SQUARE FEET USING A 10–20–10 ANALYSIS OR AN EQUIVILENT WORKED INTO THE SOIL A MINIMUM OF 4".
   c) SEED SHALL BE ANNUAL RYEGRASS APPLIED AT NOT LESS THAN ONE POUND PER 1,000 SQUARE FEET.
   d) MULCH ALL NEWLY SEEDED AREA WITH UNROTTED SALT HAY OR SMALL GRAIN STRAW AT A RATE OF 90 POUNDS PER 1,000 SQUARE FEET ACCORDING TO THE NJ STANDARD. MULCH SHALL NOT BE GROUND INTO SHORT PIECES AND IN NO CASE SHALL MORE THAN 5 DAYS ELAPSE BETWEEN SEEDING AND MULCHING.
   e) MULCH SHALL BE ANCHORED WITH A LIQUID MULCH BINDER APPLIED AT A RATE OF ONE GALLON PER 1,000 SQUARE FEET OR BY APPROVED METHODS (I.E.PEG AND TWINE, MULCH NETTING).
2.) BETWEEN OCTOBER 1 AND MARCH 1 AND WHEN THE SEASON PROHIBITS TEMPORARY SEEDING OR WHEN DISTURBED AREAS ARE SCHEDULED FOR IMMEDIATE LANDSCAPING, APPLYING THE AFOREMENTIONED ITEMS "d)" AND "e)" WILL BE ADEQUATE.
3.) SEEDING DATES: THE FOLLOWING ARE THE RECOMMENDED SEEDING DATES FOR THE ESTABLISHMENT OF TEMPORARY OR PERMANENT VEGETATION:
   a) SPRING: MARCH 1 – MAY 15
   b) FALL: AUGUST 15 – OCTOBER 1
4.) PERMANENT VEGETATIVE COVER IS TO BE ESTABLISHED ON EXPOSED AREAS WITHIN 10 DAYS AFTER FINAL GRADING. MULCH IS TO BE USED FOR PROTECTION UNTIL FINAL VEGETATION IS ESTABLISHED.
5.) PERMANENT SEEDING AND STABILIZATION TO BE IN ACCORDANCE WITH THE STANDARDS FOR PERMANENT VEGETATIVE COVER–ALL EXPOSED SURFACES WILL BE TREATED WITH 4" TOPSOIL PRIOR TO FINAL STABILIZATION AND THE FOLLOWING ITEMS APPLIED AT THE DESIGNATED RATES:
   a) LIME SHALL BE APPLIED AT 90 POUNDS PER 1,000 SQUARE FEET CONSISTING OF GROUND LIMESTONE INCORPORATED INTO THE TOP 4" OF TOPSOIL.
   b) FERTILIZER SHALL BE 14 POUNDS PER 1,000 SQURE FEET 10–20–10 INCORPORATED INTO THE TOP 4" OF TOPSOIL.
   c) SEED SHALL BE 25 POUNDS PER ACRE OF KENTUCKY BLUEGRASS, 15 POUNDS PER ACRE OF RED FESCUE, SPREADING FESCUE AT 15 POUNDS PER ACRE, AND 10 POUNDS PER ACRE OF PERENNIAL RYEGRASS.
   d) IN SHADE AREAS, INCREASE RED FESCUE TO 20 POUNDS PER ACRE AND DECREASE KENTUCKY BLUEGRASS TO 20 POUNDS PER ACRE.
   e) MULCH ALL NEWLY SEEDED AREA WITH UNROTTED SALT HAY OR SMALL GRAIN STRAW AT A RATE OF 90 POUNDS PER 1,000 SQUARE FEET ACCORDING TO THE NJ STANDARD. MULCH SHALL NOT BE GROUND INTO SHORT PIECES AND IN NO CASE SHALL MORE THAN 5 DAYS ELAPSE BETWEEN SEEDING AND MULCHING.
   f) MULCH SHALL BE ANCHORED WIH A LIQUID MULCH BINDER APPLIED AT A RATE OF ONE GALLON PER 1,000 SQUARE FEET OR BY APPROVED METHODS (I.E.PEG AND TWINE, MULCH NETTING).

ADDITIONAL SOIL EROSION NOTES:

1.) **BASED UPON REVIEW OF THE U.S. DEPARTMENT OF AGRIGULTURE'S NATURAL RESOURCE CONSERVATION SERVICE WEB SOIL SURVEY, THE PROJECT SITE CONSISTS OF URBAN LAND–HALEDON COMPLEX (USHALB).**
2.) **REVIEW OF THE FEMA FLOOD INSURANCE RATE MAPS FOR SUMMIT SHOWS THAT THE SITE IS LOCATED IN ZONE 'X' (AREAS OUTSIDE THE 0.2% ANNUAL CHANCE FLOODPLAIN).**
3.) **REVIEW OF THE NJ GEO–WEB, DEP'S INTERACTIVE GIS INTERFACE, SHOWS NO WETLANDS ON PROJECT SITE.**

NOTES:

1.) THE EXISTING CONDITIONS SERVING AS THE BASIS OF THIS PLAN ARE TAKEN FROM AND BASED UPON A SURVEY ENTITLED "BOUNDARY & TOPOGRAPHIC SURVEY", PREPARED FOR THE CURRENT OWNER AND APPLICANT BY JAMES P. DEADY SURVEYOR, LLC, DATED OCTOBER 30, 2024 AND LAST REVISED THROUGH APRIL 14, 2025.
2.) THE CITY ENGINEER MUST BE NOTIFIED AT LEAST 72 HOURS IN ADVANCE OF INTALLATION OF THE STORMWATER MANAGEMENT SYSTEM AND RELATED APPURTANENCES.
3.) THE APPLICANT SHALL CONSTRUCT OR INSTALL SOIL EROSION AND SEDIMENT CONTROL PROTECTIVE MEASURES AS REQUIRED BY THE CITY ENGINEER OR BY THE SOMERSET–UNION SOIL CONSERVATION DISTRICT PRIOR TO ANY SITE DEVELOPMENT WORK AT THE START OF CONSTRUCTION.
4.) THE APPLICANT SHALL NOTIFY THE CITY ENGINEER PRIOR TO COMMENCING CONSTRUCTION AND AT SUCH OTHER TIMES AS MAY BE REQUIRED IN THE GRADING PERMIT APPROVAL.
5.) THE APPLICANT SHALL GRADE THE PROPERTY AND INSTALL ANY REQUIRED CONTROL MEASURES AS MAY BE SHOWN ON THE APPROVED GRADING PLAN OR AS SPECIFIED IN THE GRADING PERMIT, OR BOTH, AND SHALL OBTAIN FINAL GRADING APPROVAL FROM THE CITY ENGINEER.
6.) ALL SOIL EROSION AND SEDIMENT CONTROL PROTECTIVE MEASURES SHALL BE MAINTAINED OPERATIONAL THROUGHOUT THE PROJECT OR UNTIL SUCH TIME AS THE CITY ENGINEER AUTHORIZES REMOVAL.
7.) ALL EXCESS AND/OR EXCESS EXCAVATED SOIL WILL BE REMOVED FROM SITE.
8.) ALL TREES IN THE WORK AREA NOT SCHEDULED FOR REMOVAL ARE TO BE PROTECTED IN ACCORDANCE WITH THIS PLAN AND CITY REQUIREMENTS. FOR THOSE TREES SCHEDULED FOR REMOVAL, A TREE REMOVAL PERMIT MUST BE OBTAINED FROM THE CITY.
9.) PERCOLATION TEST IS TO BE PERFORMED BEFORE DRY WELL IS CONSTRUCTED. RESULTS ARE TO BE SUBMITTED TO THE CITY ENGINEER FOR REVIEW PRIOR TO PLACEMENT OF DRYWELL TANKS. IF SOILS ARE SHOWN TO BE UNSUITABLE, AN ALTERNATE METHOD SHALL BE DESIGNED AND SUBMITTED FOR APPROVAL BY THE CITY ENGINEER. THE RESULTS MUST VERIFY THE ABSENCE OF GROUNDWATER WITHIN AT LEAST TWO (2) FEET OF THE BOTTOM OF THE SYSTEM AND THE PERMEABILITY OF THE SOILS MUST BE SUFFICIENT TO FULLY DRAIN THE SYSTEM WITHIN SEVENTY–TWO (72) HOURS. IF THE SOIL IS FOUND TO BE UNSUITABLE, AN ALTERNATIVE DESIGN MUST BE SUBMITTED FOR APPROVAL.
10.) SUMP PUMP DISCHARGES ARE NOT PERMITTED TO BE THROUGH THE CURB IN THE ROADWAY OR TO ANY PROPOSED DRY WELL OR STORMWATER STORAGE FACILITY. DIRECT CONNECTION TO A MUNICIPAL STORM STRUCTURE IS PERMITTED OR THE DISCHARGE SHALL BE OUTSIDE THE DWELLING TO A SPLASH BLOCK OR SIMILAR FEATURE TO DISPERSE FLOWS AND AVOID ANY CONCENTRATED FLOWS. SUMP PUMP DISCHARGES AT GRADE MUST DISCHARGE IN A MANNER WHICH DOES NOT ADVERSELY IMPACT AN ADJACENT PROPERTY OR CAUSE A HAZARDOUS CONDITION IN THE CITY RIGHT OF WAY (ie–ICING).

SEQUENCE OF CONSTRUCTION:

a) INSTALL VEHICLE WHEEL CLEANING BLANKET AND INLET PROTECTION. b) INSTALL SILT FENCE. c) CLEAR SITE.	1 TO 2 WEEKS
d) STRIP AND STOCKPILE SOIL. e) CONSTRUCT SITE IMPROVEMENTS. f) PROVIDE TEMPORARY STABILIZATION. g) PROVIDE PERMANENT STABILIZATION.	8 TO 10 MONTHS
h) REMOVE TEMPORARY SILT FENCE, INLET PROTECTION AND OTHER SOIL EROSION CONTROLS.	1 TO 2 WEEKS

TOTAL PROJECT TIMEFRAME = 10 TO 12 MONTHS

R–25 RESIDENCE ZONE

BULK REQUIREMENT DESCRIPTION	REQUIRED/ALLOWED	EXISTING	PROPOSED
LOT AREA	25,000 S.F.	33,513 S.F.	NO CHANGE
LOT WIDTH	100 FT.	156.73 FT.	NO CHANGE
FRONT YARD	53.8 FT. (AVG.)	55.4 FT.	53.9 FT.
SIDE YARD	17 FT.	37.2 FT./42.9 FT.	43.4 FT./21.2 FT.
COMBINED SIDE YARD	40% (62.7')	51.1% (80.1')	41.2% (64.6')
BUILDING HEIGHT	38 FT.	34± FT.	36.9 FT.
MAX. LOT COVERAGE	30% (10,053 S.F.)	27.3% (9,147 S.F.)	29.9% (10,034 S.F.)
MAX. BUILDING COVERAGE	14% (4,692 S.F.)	11.7% (3,920 S.F.)	16.8% (5,625 S.F.)*
MAX. FLOOR AREA RATIO	25% (8,378 S.F.)	--% (-- S.F.)	24.7% (8,274 S.F.)

* VARIANCE REQUIRED

COVERAGE CALCULATIONS

	EXISTING	CHANGE	PROPOSED
HOUSE	3,106 S.F.	REMOVE & REPLACE	4,154 S.F.
PORCHES	75 S.F.	REMOVE & REPLACE	534 S.F.
DECKS/TERRACES	655 S.F.	REMOVE & REPLACE	937 S.F.
SHED	84 S.F.	REMOVE	0 S.F.
REAR WALK/PATIO	940 S.F.	REMOVE & REPLACE	445 S.F.
FRONT WALK	751 S.F.	REMOVE & REPLACE	520 S.F.
PAVED DRIVEWAY	1,746 S.F.	REMOVE & REPLACE	2,170 S.F.
POOL	503 S.F.	REMOVE & REPLACE	648 S.F.
POOL SURROUND	1,287 S.F.	REMOVE & REPLACE	516 S.F.
SPA	0 S.F.	NEW	64 S.F.
SPA SURROUND	0 S.F.	NEW	46 S.F.
TOTAL COVERAGE	9,147 S.F.		10,034 S.F.

LOT GRADING PLAN

PREPARED FOR

GELBAND RESIDENCE

45 PROSPECT HILL AVENUE
TAX LOT 28 IN BLOCK 3501
CITY OF SUMMIT
UNION COUNTY NEW JERSEY

ABC SURVEYS, LLC
PROFESSIONAL LAND SURVEYING AND ENGINEERING
466 SOUTHERN BOULEVARD
CHATHAM, NEW JERSEY 07928
VOICE 973-377-2174 FAX 973-377-5533

ANDREW B. CLARKE–PLS,PE
NJ PROFESSIONAL ENGINEER AND LAND SURVEYOR LICENSE No. GB04105600

JOB No.: 24106
DES.: A.B.C.
SCALE: 1"=20'
DATE: 05/27/25

REVISED: 07/28/25